74.2st

Two Speed Self-Tailing Winch

HARKEN

Winch Parts Installation Service

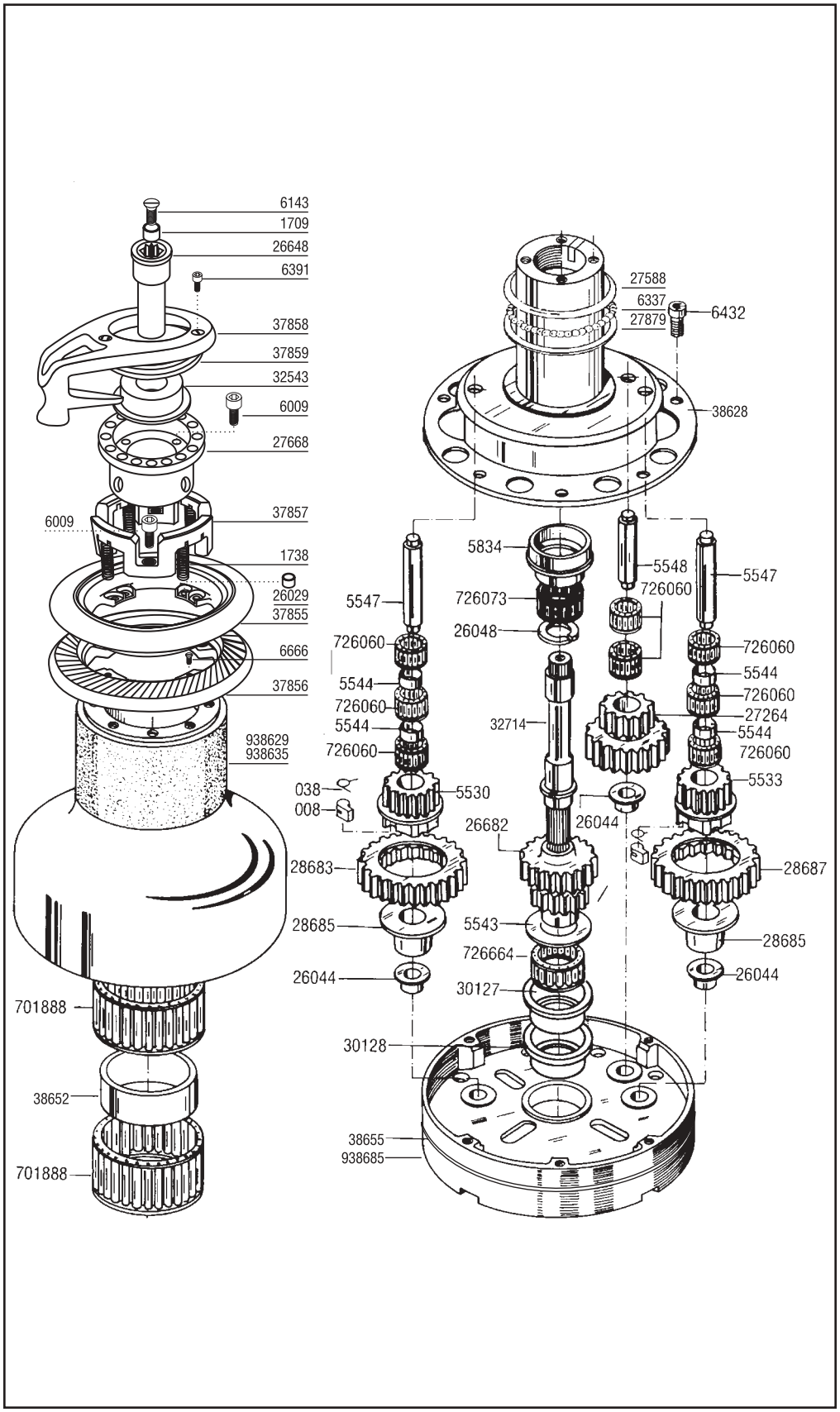

Parts List

008	Pawl
038	Pawl Spring
1709	Plastic Washer
1738	Spring
5530	Pawl Gear
5533	Pawl Gear
5543	Washer
5544	Spacer
5547	Gear Shaft
5548	Gear Shaft
5834	Spindle Guide
6009	Screw
6143	Top Screw
6337	Ball
6391	Screw
6432	Screw
6666	Screw
26029	Plastic Washer
26044	Plastic Bushing
26048	Split Ring
26648	Handle Socket
26682	Gear
27264	Gear
27588	Thrust Bearing
27668	Striper Arm Support
27879	Thrust Washer
28683	Ratchet Gear
28685	Bushing
28687	Ratchet Gear
30127	Bushing
30128	Plastic Bushing
32543	Top Cap
32714	Center Spindle
37855	Upper Jaw
37856	Lower Jaw
37857	Springs Support
37858	Striper Arm
37859	Cover
38628	Center Stem
38652	Spacer
38655	Red Ring
701888	Bearing
726060	Bearing
726073	Bearing
726664	Bearing
938629	Aluminum Drum
938635	Chrome Drum
938685	Winch Base

When ordering parts, please include a "B" before each number (i.e. B008)