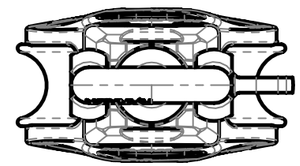

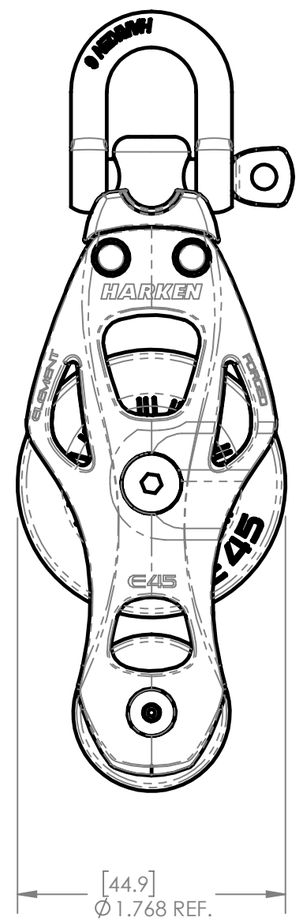
HARKEN
ELEMENT
E45
[44.9]
Ø1.768 REF.

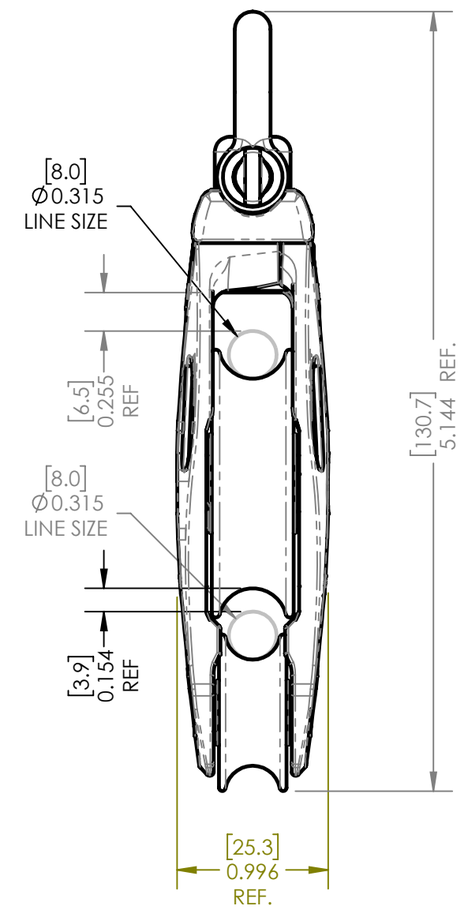
[8.0]
Ø0.315
LINE SIZE
[6.5]
0.255
REF
[8.0]
Ø0.315
LINE SIZE
[3.9]
0.154
REF
[130.7]
5.144 REF.
[25.3]
0.996
REF.