Exploded view

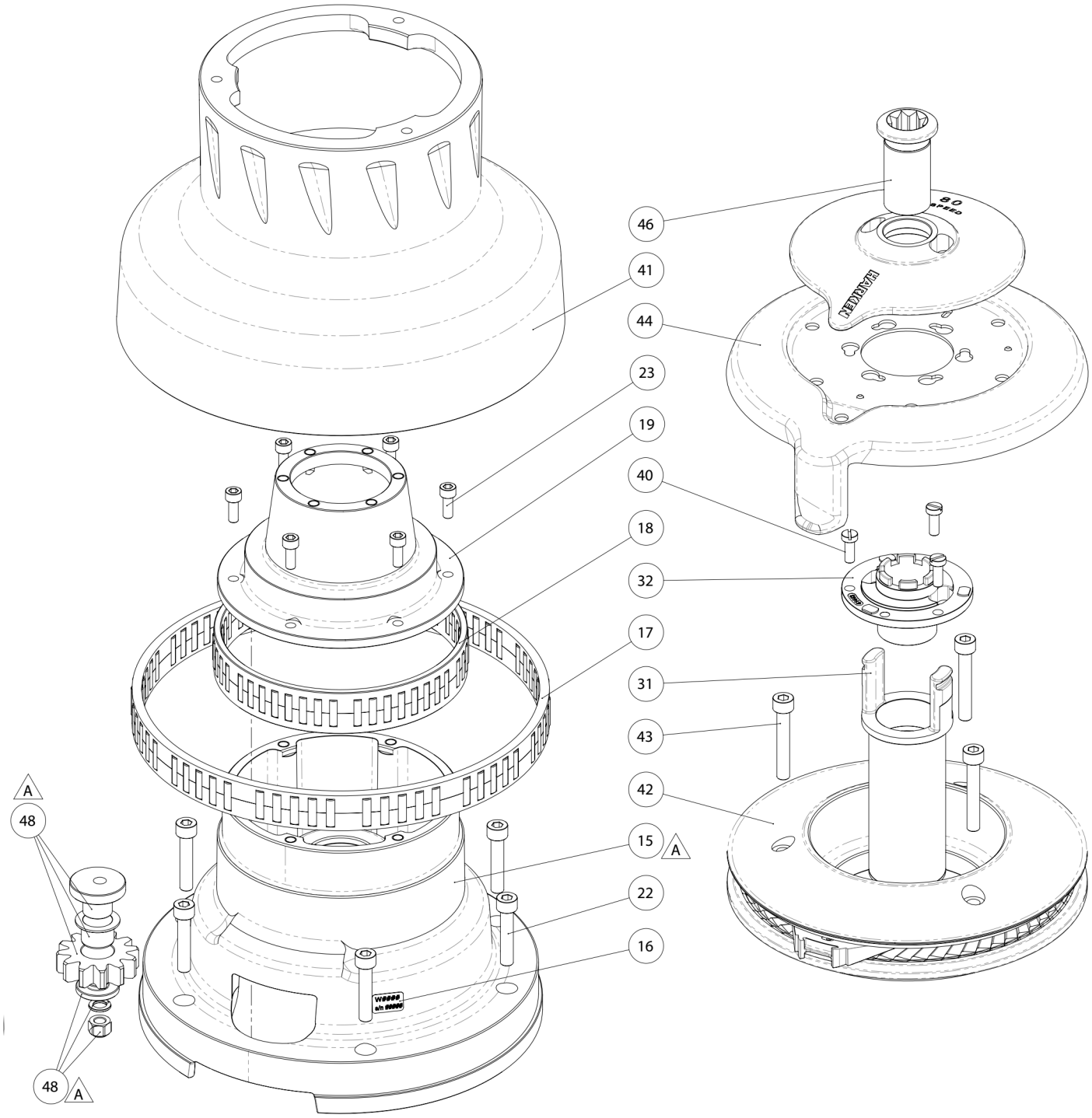

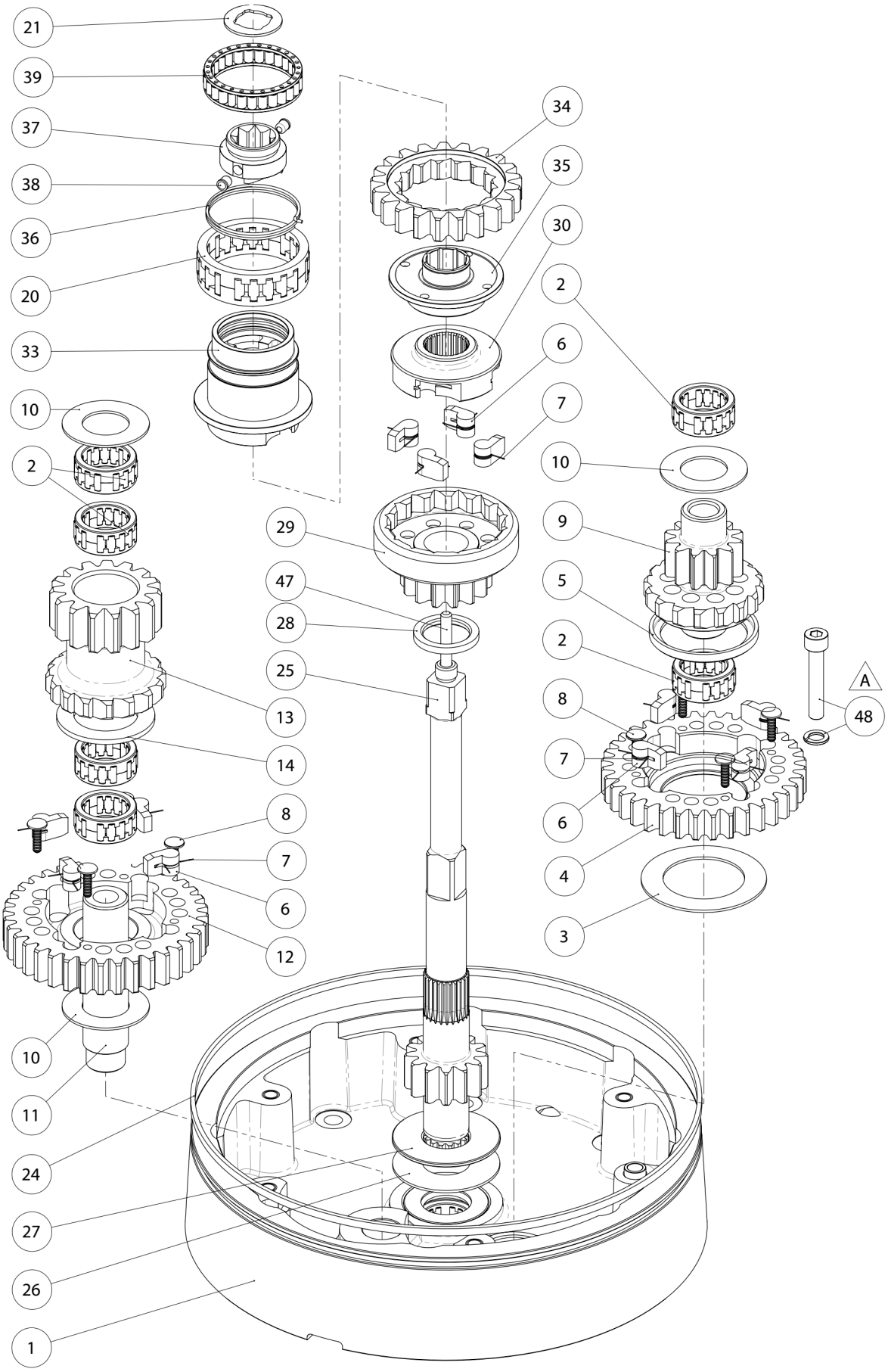
21
39
37
38
36
20
33
10
2
34
35
30
2
6
7
10
29
47
28
25
13
14
8
7
6
12
10
11
24
27
26
1
9
5
2
8
7
6
4
3
A
48

Parts List

Radial Winch 80.3 STA

A= drum in anodised aluminium

Pos.	Q.ty	Code	Description
1	1	A94158200	Base assembly *Base winch 80* *Bearing 25x35x15* *Plug for instrumented base Ø13x4* *Heli-coil M8x10* *Centering bushing Ø12* *Heli-coil M10x10* *Bush gear shaft 32x39x22* *Bushing 39x32x22* *Seal 25x47x7* *Winch Product Sticker***
2	6	A74506900	Bearing 25x35x15
3	1	S 43417 00 81	Washer 69x45x1,5*
4	1	S 42387 00 04	Gear Z36
5	1	S402260041	Bushing 4th gear pinion
6	12	S392440004	Pawl Ø10
7	12	S 28504 00 01	Pawl Spring
8	8	HFS753	Plug-pawl retainer
9	1	S405580004	Pinion 3rd
10	3	S 43411 00 81	Washer 48x26x1,5*
11	1	S 40583 00 04	Shaft - FD pinion
12	1	S 40555 00 04	Gear Z36
13	1	S405540004	Final Drive Pinion
14	1	S 43886 00 81	Washer 54x35,2x3*
15	1	A 941587 00	Assy Housing W80 *Housing W80* *Bushing 39x32x22* *Heli-coil M6x9*
16	1	S 41876 00 63	Winch Serial Number Sticker
17	1	A74059500	Roller Bearing lower*
18	1	A74158900	Roller Bearing Ø148x160x30*
19	1	A94159600	Assy flange *Stripper arm support* *Heli-coil M6x9*
20	1	A73129200	Roller Bearing 50-62-20 ERTA P
21	1	S 41388 00 02	Washer Ø17.2xØ32x1.5
22	6	M0624603	Screw M8x40 UNI5931*
23	6	M0635103	Socket head screw M6x16 UNI 5931*
24	1	S386550097	Red line*
25	1	S418020004	Shaft Z13 W80 Pred EL/HY
26	1	S 43416 00 81	Washer 59x26x1,5*
27	1	S402050004	Washer 25,2x61x2,4*
28	1	S 40586 00 80	Spacer*
29	1	A94055700	Assy Pinion Z14 *Pinion Z14* *Bushing 24,5x28,5x27*
30	1	S 40562 00 04	Hub 2nd Ratchet
31	1	A74159500	Assy command tube W80 *Button 3 speed* *Command Bushing 3 speed* *Command Tube 3 speed W80*
32	1	S 41557 00 A0	Stripper arm support
33	1	S 41540 00 04	Pawls Carrier 3 speed
34	1	S417990041	Rachet Gear Z21xN4
35	1	S418000080	Flange 1st speed W80
36	1	S 37751 00 01	Clutch Spring
37	1	S 41542 00 04	Dog Clutch 3 speed
38	2	M6009463	Spring loaded ball plunger Ø6
39	1	A73422600	Bearing 45x55x12
40	3	M0601903	Screw M6x16 UNI1207*
41	1	A74159000	Drum assembly W80
42	1	A94159200	Assy Jaws Winch 80 *Upper Jaw ST W80* *Lower Jaw ST W80* *Spring* *Line Stripper W80* *Ball 5/16" **
43	3	M0624703	Screw M8x50 UNI5931*
44	1	A 941599 01	Kit stripper arm *Stripper-arm W80* *Pin*
45	1	S4180100B7	Cover W80.3 ST
46	1	A 941914 00	Assy Socket Handle Winch 3 speed EL/HY *Socket Handle 3 speed* *Washer ø25xø15x4* *Nut Screw for Disconnect Rod* *O ring RC 2025 series**
47	1	S418110002	Disconnect Rod 3speed W80
48	1	A 967265 00	W80,3 speed kit *Winch 80,3 Speed Pin* *Bushing Ø22/Ø25x15.5* *Washer 3 speed W80* *Idler Gear Z12* *Nut selflock UNI 7473:1975 - M8 - A4* *Washer 8.4 U1751 DIN127 A4* *Screw M8x45 UNI 5931*

**Service kit available; see winch kit section on the website www.harken.com*
***Winch product sticker*

WARNING www HARKEN Italy spa www.harken.com (+39) 031-3523511 MADE IN ITALY

Vertical electric motor

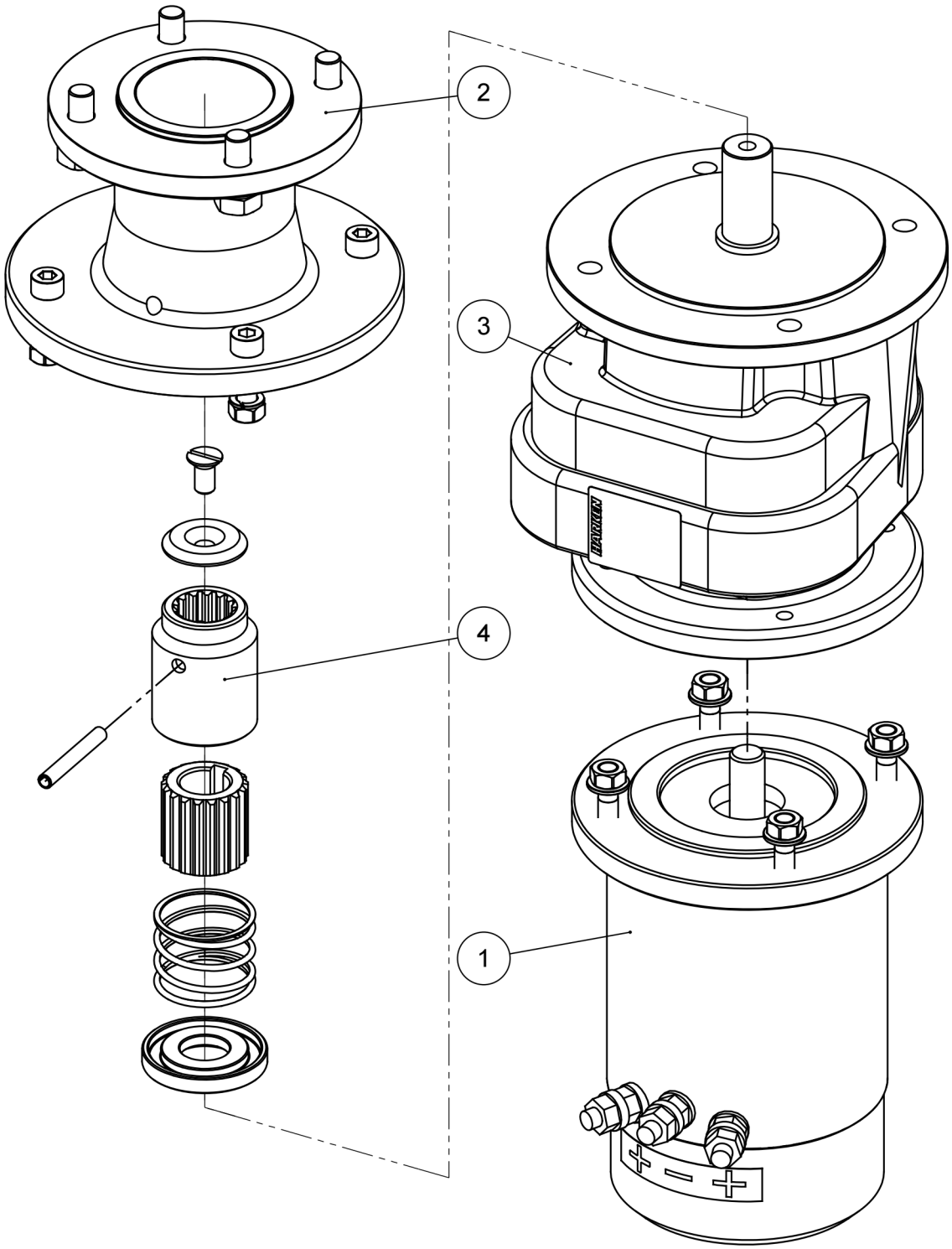

Pos.	Q.ty	Code	Description
1	1	A84807000 A84807100	KIT EL Motor 12V 1,5kW VT KIT EL Motor 24V 2kW VT
2	1	A94954200	Assy flange Vertical Gbox W80
3	1	A93303900	KIT VT Gearbox
4	1	A96508200	KIT EL VT Motor Clutch