Exploded view

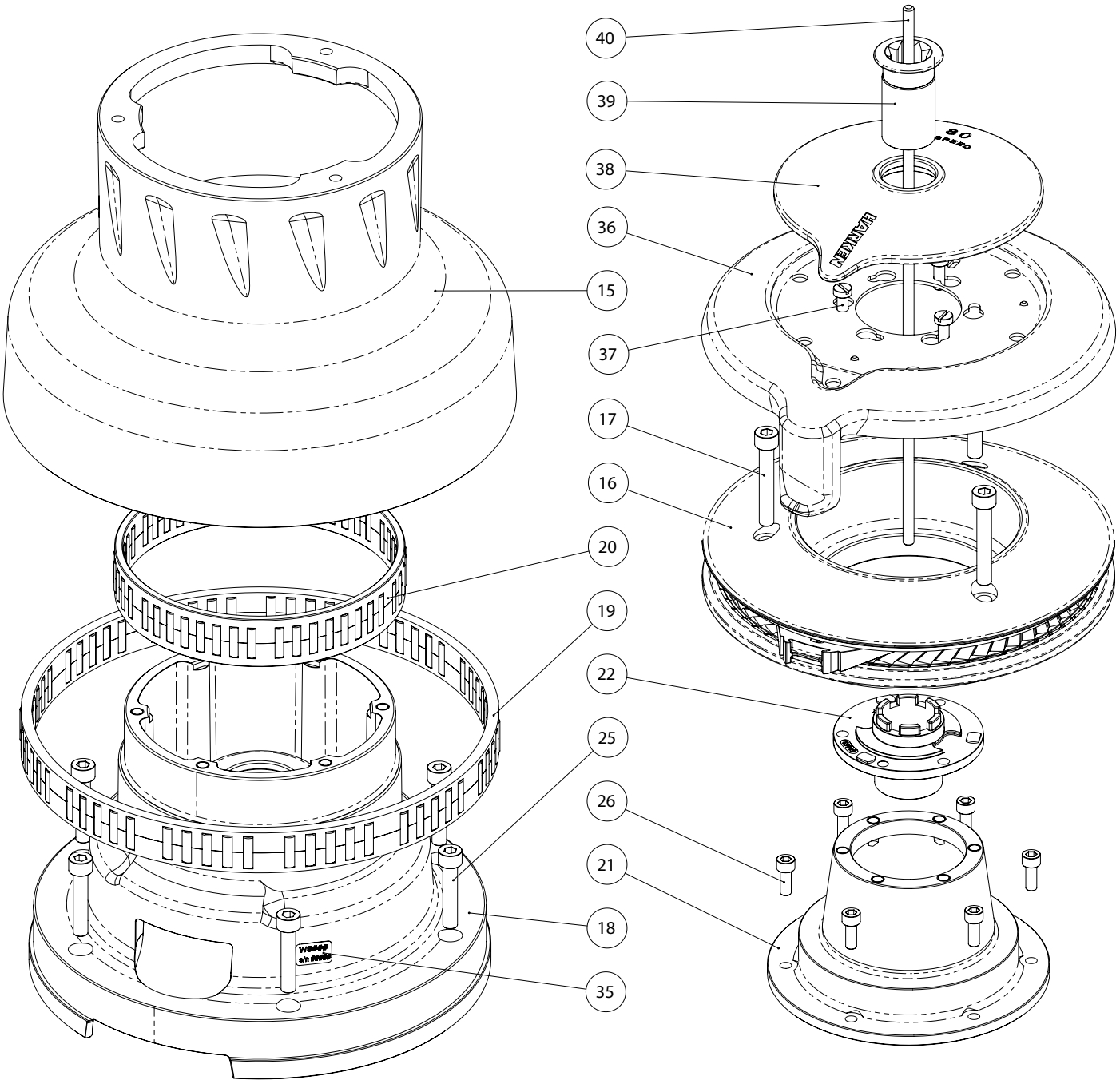

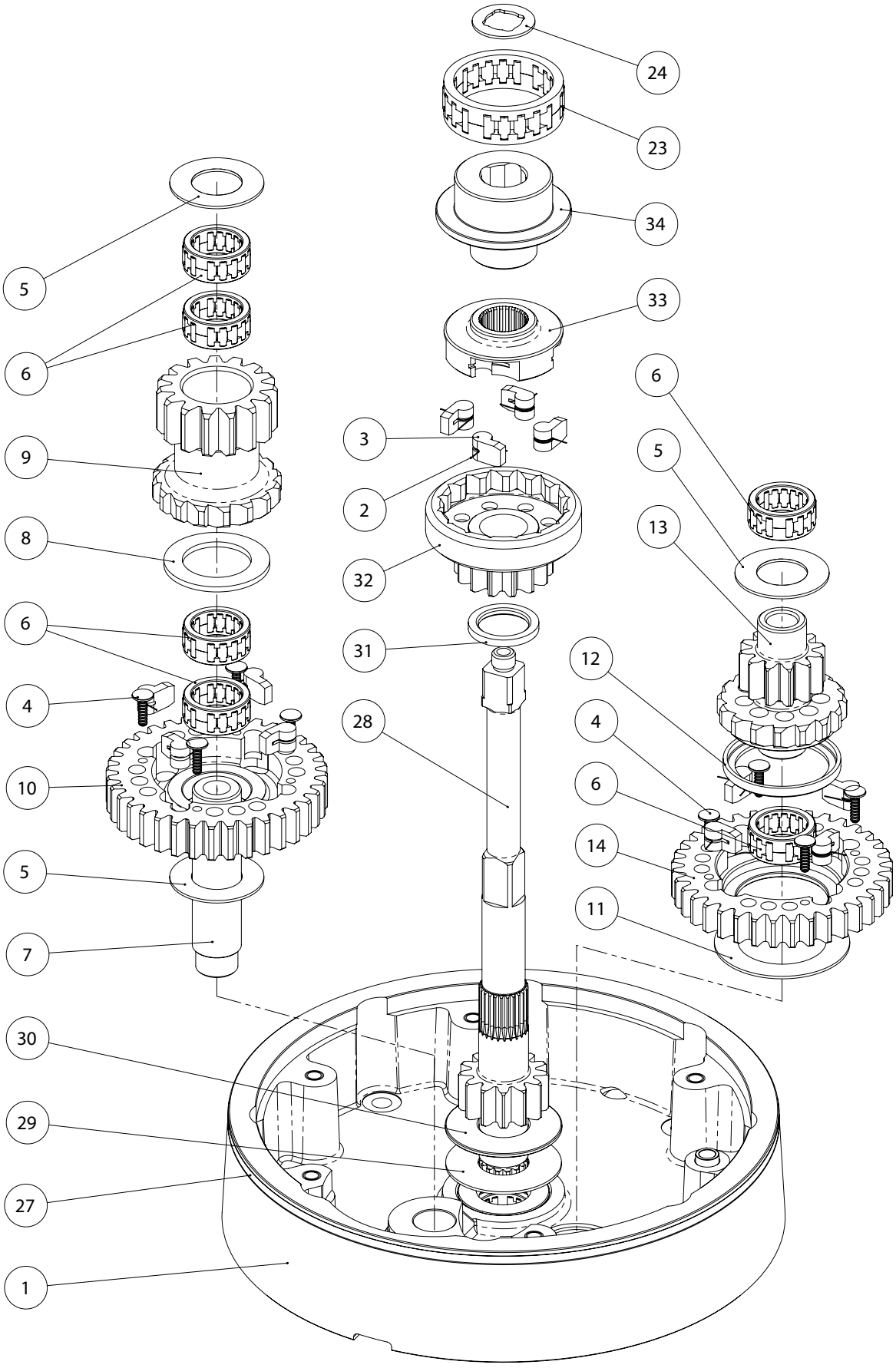
24
23
34
33
6
5
13
12
4
6
14
11
3
2
32
31
28
5
6
9
8
6
4
10
5
7
30
29
27
1

Radial Winch 80.2 STC

C=drum in chromed bronze

Pos.	Q.ty	Code	Description
1	1	A94158200	Base assembly W80 *Base W80* *Bearing 25x35x15* *Plug for instrumented base Ø13x4* *Heli-coil M8x10* *Centering bushing Ø12* *Heli-coil M10x10* *Bush gear shaft 32x39x22* *Bushing 39x32x22* *Seal 25x47x7* *Winch Product Sticker***
2	12	S 28504 00 01	Pawl Spring
3	12	S392440004	Pawl Ø 10
4	8	HFS753	Plug-pawl retainer
5	3	S 43411 00 81	Washer 48x26x1,5*
6	6	A74506900	Bearing 25x35x15
7	1	S 40583 00 04	Shaft FD pinion
8	1	S 43886 00 81	Washer 54x35,2x3*
9	1	S405540004	Final Drive Pinion W80
10	1	S 40555 00 04	Gear Z36 W80
11	1	S 43417 00 81	Washer 69x45x1,5*
12	1	S402260041	Bushing 4th gear pinion
13	1	S405580004	Pinion 3rd
14	1	S 42387 00 04	Gear Z=36 W80
15	1	A74159100	Drum C assembly W80
16	1	A94159200	Assy Jaws Winch 80 *Upper Jaw ST W80* *Lower Jaw ST W80* *Line Stripper W80* *Ball 5/16""** *Spring*
17	3	M0624703	Screw M8x50 UNI5931*
18	1	A 941587 00	Assy Housing W80 *Housing W80* *Bushing 39x32x22* *Heli-coil M6x9"*
19	1	A74059500	Roller Bearing lower W80*
20	1	A74158900	Roller bearing Ø148x160x30*
21	1	A94159600	Assy flange *Stripper arm support* *Heli-coil M6x9*
22	1	S 41443 00 A0	Stripper Arm Housing W60/70
23	1	A73129200	Roller Bearing 50-62-20 ERTA P
24	1	S 41388 00 02	Washer Ø17.2xØ32x1.5
25	6	M0624603	Screw M8x40 UNI5931*
26	6	M0635103	Socket head screw M6x16 UNI 5931*
27	1	S386550097	Red line*
28	1	S418020004	Shaft Z13 W80 Pred EL/HY
29	1	S 43416 00 81	Washer 59x26x1,5*
30	1	S402050004	Washer 25,2x61x2,4*
31	1	S 40586 00 80	Spacer*
32	1	A94055700	Assy Pinion Z14 *Pinion Z14* *Bushing 24,5x28,5x27*
33	1	S 40562 00 04	Hub 2nd Ratchet
34	1	S 41586 00 80	Inner spacer
35	1	S 41876 00 63	Winch Serial Number Sticker
36	1	A 941599 01	Kit stripper arm *Stripper-arm W80* *Pin*
37	3	M0601903	Screw M6x16 UNI1207*
38	1	S4160000B7	Cover W80.2 ST
39	1	A 941493 00	Assy Socket W80 EL/HY *Socket Handle W80* *Washer Ø25xØ15x4* *Nut Screw for Disconnect Rod* *O ring RC 2025 series**
40	1	S495390002	Disconnect rod W80.2

**Service kit available; see winch kit section on the website www.harken.com*

***Winch product sticker*

Hydraulic motor

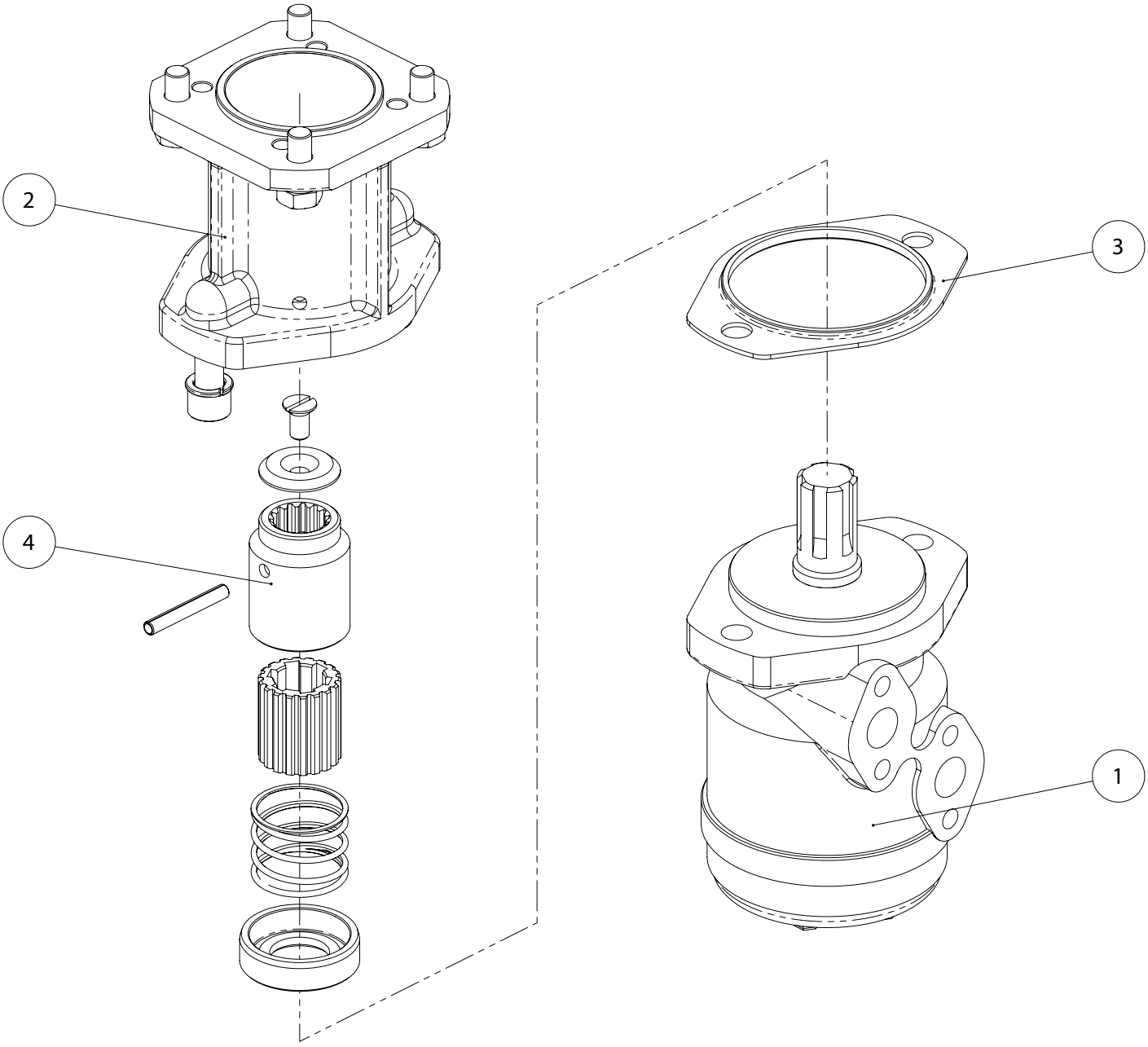

Pos.	Q.ty	Code	Description
1	1	G30849000Y	Hydraulic motor "OMR100 151-0722 alb.scan. 1"
2	1	A 942266 00	KIT HY Motor Flange (OMR100)
3	1	S 29505 00 82	Spacer
4	1	A 932648 00	KIT Clutch HY Motor (OMR100)