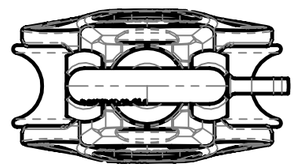

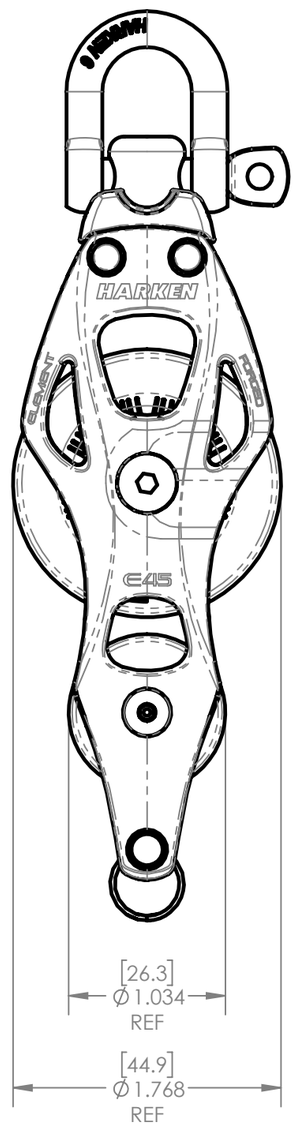
HARKEN
ELEMENT
RIDGE
E45
[26.3]
Ø1.034
REF
[44.9]
Ø1.768
REF

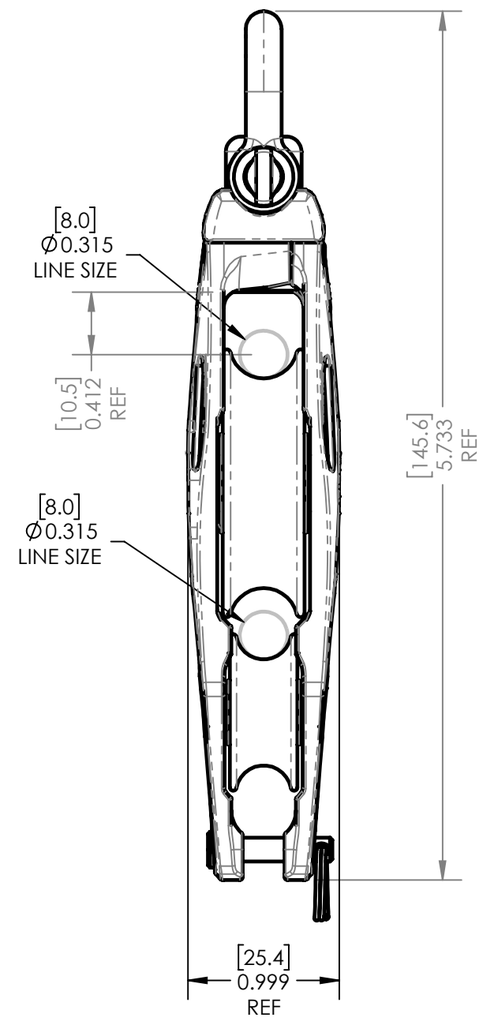
[8.0]
Ø0.315
LINE SIZE
[10.5]
0.412
REF
[8.0]
Ø0.315
LINE SIZE
[145.6]
5.733
REF
[25.4]
0.999
REF