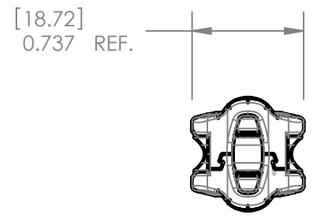
[18.72]
0.737 REF.

[5.79]
Ø0.228 REF.

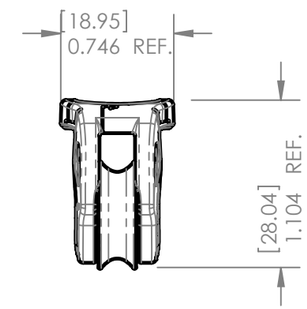
[18.95]
0.746 REF.
[28.04]
1.104 REF.